ARTWORK APPROVAL FORM

ORDER DETAILS		ITEM DETAILS		MATERIAL COLOURS			
ORDER NUMBER:	X	FABRIC:	COTTON	COTTON:	NATURAL	X:	X
ITEM CODE:	MB9012	GRAMMAGE:	STANDARD	CORDS:	NATURAL	X:	X
QUANTITY:	X	X:	X	STITCHES:	NATURAL	X:	X
ITEM SIZE:	S & M & L	X:	X	X:	X	X:	X
		X:	X	X:	X	X:	X

SCALE 1:10

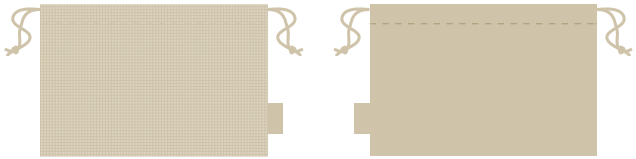

BACK
- TECHNIQUE
- LOGO
- SIZE

ATTENTION 1

LABEL FRONT
TECHNIQUE SILKSCREEN
LOGO -
SIZE -

ATTENTION 1

LABEL BACK
SILKSCREEN TECHNIQUE
- LOGO
- SIZE

ATTENTION 1

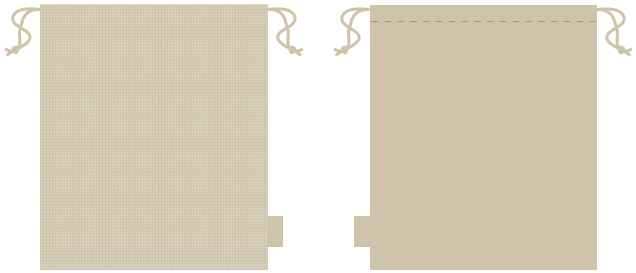

BACK
- TECHNIQUE
- LOGO
- SIZE

ATTENTION 1

LABEL FRONT
TECHNIQUE SILKSCREEN
LOGO -
SIZE -

ATTENTION 1

LABEL BACK
SILKSCREEN TECHNIQUE
- LOGO
- SIZE

ATTENTION 1

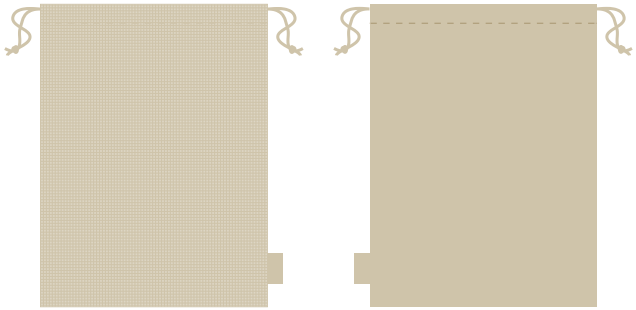

BACK
- TECHNIQUE
- LOGO
- SIZE

ATTENTION 1

LABEL FRONT
TECHNIQUE SILKSCREEN
LOGO -
SIZE -

ATTENTION 1

LABEL BACK
SILKSCREEN TECHNIQUE
- LOGO
- SIZE

ATTENTION 1

yourChoice

GENERAL COMMENT:

GENERAL COMMENT:

ATTENTION 1:

ATTENTION 2:

MB9012

MESH BAG SET

Fabric:	Cotton
Item size:	30 x 20 cm 30 x 35 cm 30 x 40 cm
Technique:	Silkscreen on label Silskcreen on back Digital print on back Offset on kraft sleeve with black logo Full Colour on white paper sleeve

COTTON - STANDARD COLOUR

NATURAL

SCALE 1:1

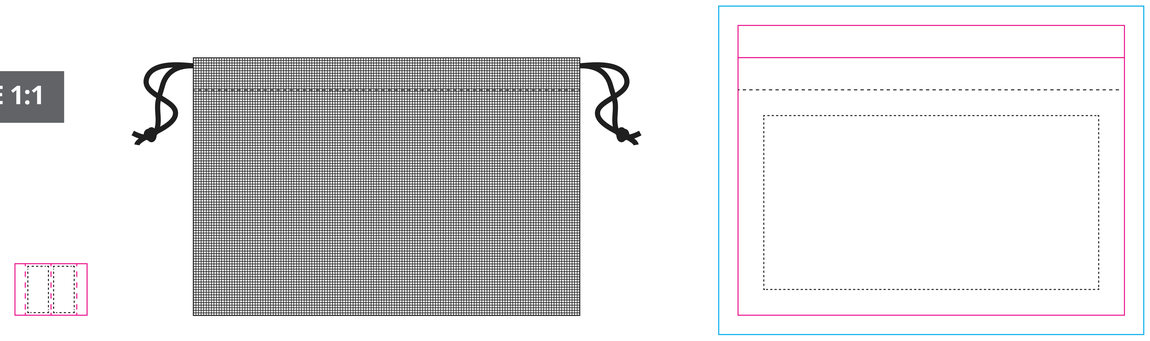

LABEL
4 x 4 cm

FRONT
30 x 20 cm

BACK
30 x 20 cm

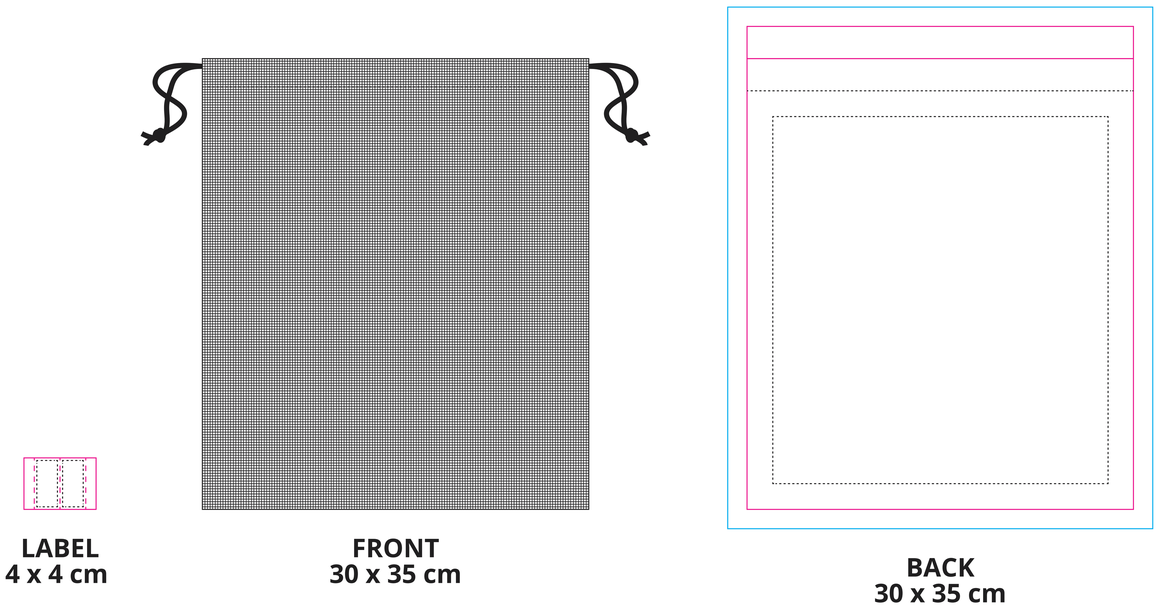

LABEL
4 x 4 cm

FRONT
30 x 35 cm

BACK
30 x 35 cm

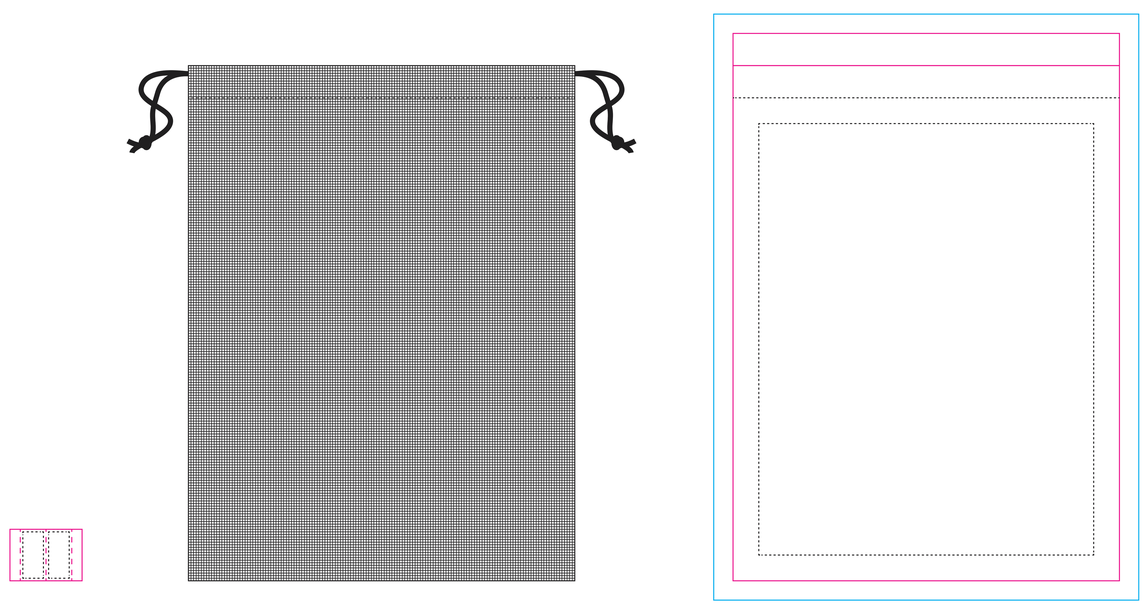

LABEL
4 x 4 cm

FRONT
30 x 40 cm

BACK
30 x 40 cm

KRAFT SLEEVE (SCALE 2:1)

MB9012
20 x 3 cm