# MB4004

## ADVENTURE BACKPACK

Backpack in 600D polyester with colourful contrasting facing and decorating cord on the front panel. Mesh pockets on both sides.

Dimensions: 29 x 16 x 46 cm

SCALE 1:1

### 600D POLYESTER - STANDARD COLOURS

### MORE COLOURS AVAILABLE ON REQUEST

- BLACK
- WHITE
- 295 U
- 186 U
- 420 U
- 114 U
- 157 U
- 638 U
- 468 U
- 293 U
- RHODAMINE RED U
- 379 U

### STANDARD COLOUR CUSTOMIZATION

### CORDS, MESH, ZIPPER, PP WEBBING

- BLACK
- WHITE
- 186 C
- 287 C
- COOL GREY 6 C

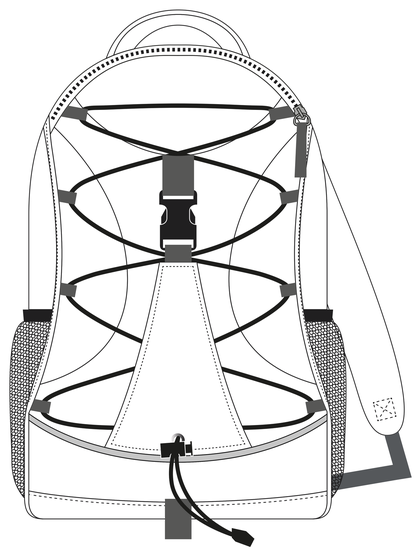

FRONT

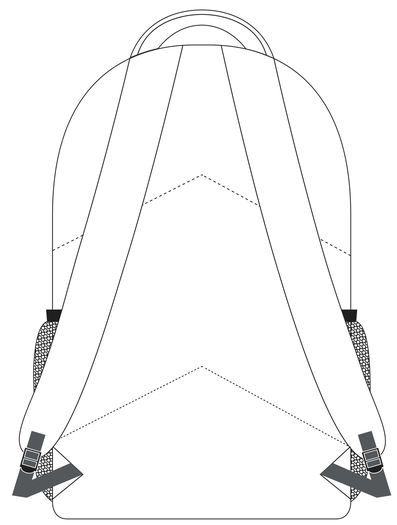

BACK

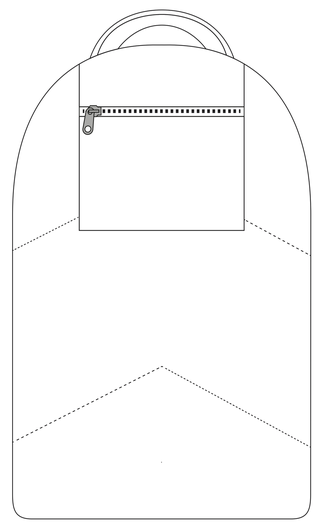

INSIDE

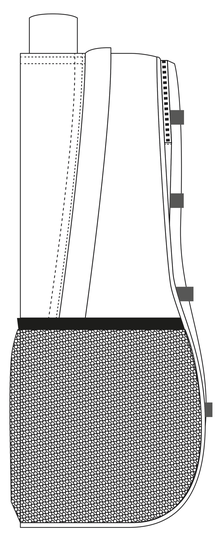

LEFT SIDE

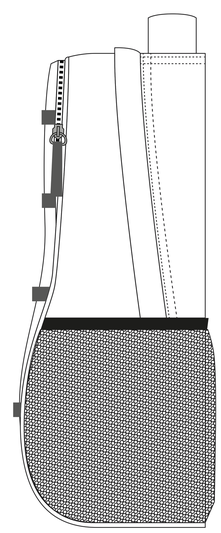

RIGHT SIDE

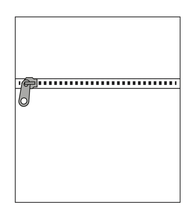

INSIDE POCKET