MH2337

FLAT SUBLIMATED VISOR CAP

Panels: 6
Profile: Medium
Fabric: Premium cotton twill on crown with polyester fabric on visor
Sandwich: No

Other info.: Flat visor, cotton sweatband & hook and loop closure

SCALE 1:1

PREMIUM COTTON TWILL 260 gsm (VISOR ONLY) - STANDARD COLOURS

WHITE

PREMIUM COTTON TWILL 260 gsm (PANELS ONLY) - STANDARD COLOURS

BLACK	3425 C
WHITE	1235 C
WARM GRAY 1 C	5535 C
200 C	195 C
1525 C	476 C
7530 C	296 C
423 C	7528 C
COOL GRAY 11 C	706 C
7427 C	7685 C
534 C	658 C
294 C	417 C
7763 C	

FACTORY DIE CUT

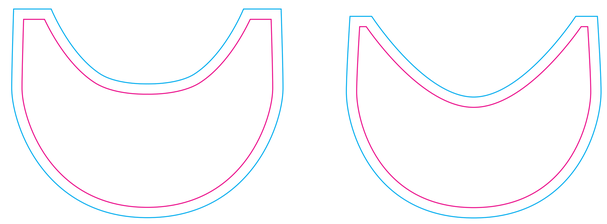

VISOR TOP VISOR BOTTOM

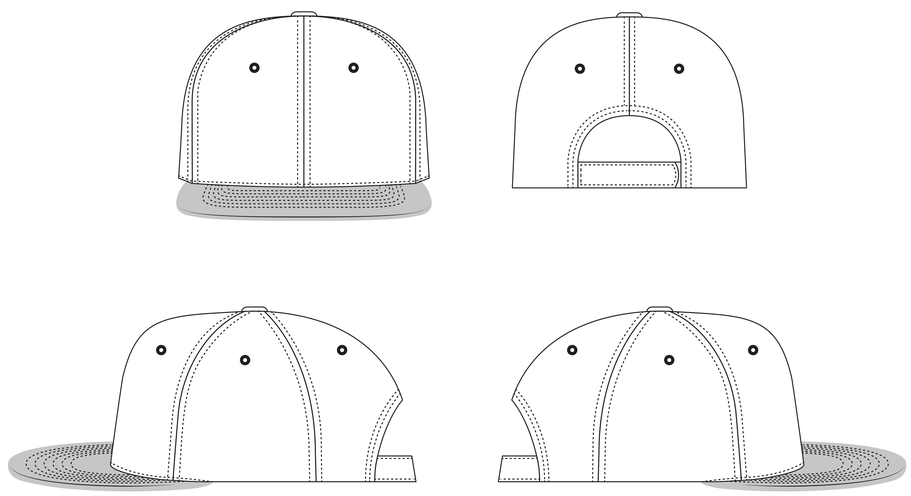

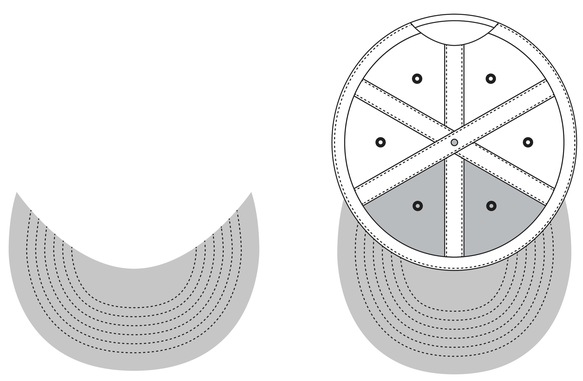

VISOR TOP INSIDE

STANDARD CLOSURE:

HOOK AND LOOP CLOSURE

OPTIONAL CLOSURE:

SUNDAY BUCKLE (SHINY NICKEL)

SUNDAY BUCKLE (MATT NICKEL)

METAL BUCKLE WITH TUCK IN SLIT (SHINY NICKEL)

METAL BUCKLE WITH TUCK IN SLIT (MATT NICKEL)

INSIDE PARTS:

SEAM TAPE - WIDTH 1,5 cm (FRAGMENT)

SWEATBAND - WIDTH 3 cm